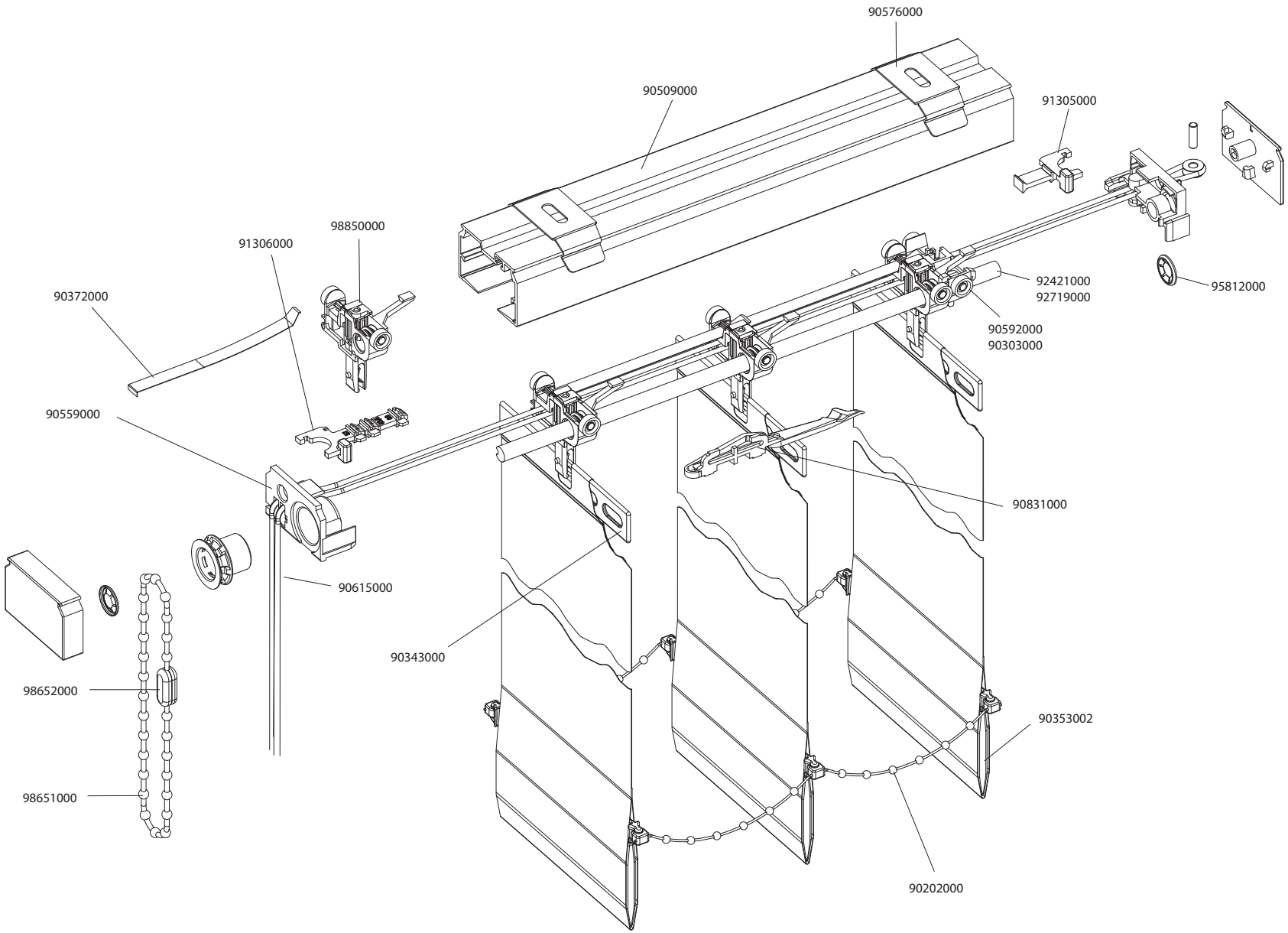
90576000
90509000
91305000
98850000
91306000
90372000
92421000
92719000
95812000
90592000
90303000
90559000
90831000
90615000
90343000
98652000
90353002
98651000
90202000